POWERNAIL® CO.

Pneumatic Powernailer®

Models 445 XLL, XLS, LL, LS, SL, SS, & SN

OPERATION AND MAINTENANCE MANUAL
MANUAL DE OPERACION Y DE MANTENIMIENTO
MANUEL D'INSTRUCTIONS ET D'ENTRETIEN

WARNING

Read this manual before you use this Powernailer®. Follow all safety warnings and instructions. If you are uncertain about the operation of the nailer, call us directly at 1-800-323-1653 for assistance or contact the closest Powernail Dealer for help. Please retain this information for future reference.

rev. 2015.07.10

INTRODUCTION

The Powernailer® Model 445 Mallet Actuated Pneumatic Nailer is designed to bring Powernail quality to a pneumatic Nailer. For those looking for ease of use in a pneumatic tool, the Powernailer Model 445 provides several distinct advantages. The Model 445 can nail 3/4" flooring down to 1/2" tongue and groove hardwood flooring through the use of easy-to-change, no-mar adapter plates. The Model 445 is designed for use with 1-1/2", 1-3/4" and 2" Powercleats® nails.

INDEX

Index..... 2
Warranty..... 2
Safety Instructions..... 3
Powernail Company Info..... 3
Operating Instructions..... 4-5
Parts & Service..... 5-7
Drive Blade..... 5
Seal Replacement..... 5-7
Parts List..... 8-9
Schematic (445 Nailers)..... 10
Schematic (445 SN Nailer)... 11
Safety Labels..... 12
Seal Locations Diagram..... 13
Depth Chart..... 14
Troubleshooting Chart..... 15
Accessory Products..... 16

LIMITED WARRANTY

POWERNAIL® Company, Inc. warrants to its customer, and to the first end-use purchaser of POWERNAIL flooring nailers purchased from an authorized POWERNAIL distributor, that each serialized manufactured nailer by POWERNAIL®, for a period of 12 months from the date of purchase, and with respect to the nailer body (specifically Models 200, 445, and 50P), for a period of 10 years from date of purchase, ("warranty period"); shall be free of defects in materials and workmanship and will meet POWERNAIL's specifications in effect at the time of Product shipment. POWERNAIL will repair or replace, at its option, any Powernailer® that does not conform to this warranty. Claims must be made no later than fifteen (15) days after the end of the warranty period. POWERNAIL will perform all repair or replacements itself or through its authorized contractors. POWERNAIL is not responsible for shipping, labor or other direct or indirect costs. Damage caused by abuse, misuse, unusual or excessive wear is excluded. Repair or modification of the Products by unauthorized parties will void this warranty. The customer is responsible for returning Products to POWERNAIL for verification of nonconformance. Warranties for Products not manufactured by POWERNAIL are limited to warranties provided to POWERNAIL by the manufacturer of such product that are assignable to customer.

THESE WARRANTIES AND REMEDIES ARE EXCLUSIVE OF ALL OTHERS, EXPRESS OR IMPLIED. THE WARRANTIES OF MERCHANTABILITY AND FITNESS FOR PURPOSE ARE EXPRESSLY EXCLUDED. IN NO EVENT SHALL POWERNAIL'S LIABILITY FOR A WARRANTY CLAIM EXCEED THE PRICE PAID TO POWERNAIL FOR THE NONCONFORMING PRODUCT, REGARDLESS OF THE FORM OR BASIS OF THE CLAIM OR CAUSE OF ACTION.

SAFETY INSTRUCTIONS

Always use approved **SAFETY GLASSES** and **EAR PROTECTION** when operating this Nailer. The operator and others in the work area should always wear approved **FRONT** and **SIDE** eye protection when operating this Nailer. Eye protection will help guard against flying nails and debris, which could cause severe eye injury.

EYE AND EAR PROTECTION should be used to prevent hearing damage when there are high noise levels in the work area.

ALWAYS use ear plugs with a noise reduction rated at 29 db or highter at a construction site.

Nailer noise ratings are at LPA-1sd=90.6,
LWA-1sd=99.3 and LPA-1s,1m=86.3.
Nailer vibration rating: m/s2=3.05.

Always **DISCONNECT THE AIR SUPPLY** before making any adjustments, repairing, clearing jams or when the Nailer is not in use. Do not use on scaffolding or ladders and disconnect nailer from air supply when transporting between installation areas.

Never attach the female end of a quick disconnect to the Nailer. This will trap air inside the Nailer and permit it to be discharged. Only the unrestricted male connection should be attached to the Nailer.

Nailer requires an air source that can continuously deliver 80 to 110 psi at 3-1/2 cubic feet of air per minute for operation.
Normal air pressure should not exceed 120 psi or damage to the Nailer and seals may occur. Excess air pressure can cause the Nailer to explode.

To prevent fire or explosion, use only regulated compressed air—do not use bottled gases of any kind (no oxygen or combustible gasses) to power this Nailer.

Nailer is intended for use installing wood flooring and is not to be used for purposes not specified in the operations manual.

The trigger is a safety device and should only be pulled when the Nailer is in proper Position on the work surface and before the plunger is struck with the mallet. Do not tie or tape down the safety trigger as the Nailer could discharge if dropped on the plunger. The Nailer will not fi re unless the trigger is pulled before the mallet blow. Do not use the trigger safety as a lock up for the plunger then rack the wood using the locked up Nailer body. It will severely damage the Mechanism and the Nailer. Use the mallet to rack the wood strip, not the Nailer.

Do not use any nails other than Powernail Powercleats Nails which are specifically designed for use in any Powernailer. Powercleats Nails are available in various lengths. Contact your Powernail Dealer for Powercleats Nails.

Use only Powernail replacement parts in the repair or maintenance of this nailer. Parts or repair services are available from the manufacturer or from agents authorised by the manufacturer. Repairs should be carried out only by trained service personel in the field of fastener driving tools who will observe proper safety controls while performing maintenace. Service personel should be qualified to to asses the safe working condition of fastener driving tools.

Never place any part of the body in the discharge path of the Nailer when air is connected to the Nailer. Always make sure Nailer is empty of cleats before connecting air hose so as to prevent any accidental discharge from occurring.

Never leave the Nailer unattended while it is connected to an air supply.

Whenever air is connected to the Nailer, keep body parts away from the nail discharge path. Disconnect the air line before making adjustments or repairs on the Nailer. Only connect air to an unloaded Nailer so as to prevent accidental discharge.

POWERNAIL COMPANY, INC.
1300 Rose Road, Lake Zurich, IL 60047 US
Phone: 1-800-323-1653 OR 847-847-3000
www.powernail.com

OPERATING INSTRUCTIONS

Consult the nail depth chart for the appropriate adapter pad to use with the thickness of flooring you are installing and the selection of Powercleat® length.

Rack the flooring into place with the rubber end of the mallet supplied with the Nailer

Place the Nailer Adapter Foot on the tongue-edge of the flooring strip to be nailed. Be sure the Adapter Foot is pressed tightly against the edge of the flooring strip above the tongue.

Be sure flooring strips are racked tightly. Pull the Safety Trigger and tap the Nailer Plunger Rubber Cap with the rubber capped end of the mallet to discharge the Nailer.

WARNING: It is not necessary to hit the Nailer hard to activate it. Never hit the Nailer with excessive force or with the metal end of the mallet, this will damage the Nailer.

DO NOT USE THE METAL END OF THE MALLET TO STRIKE THE PLUNGER, use the rubber capped end only.

Never use the Safety Trigger interlock to lock up the plunger and rack the wood with blows to the Nailer body. This will severely damage the safety mechanism and Nailer. This abuse and damage is not covered by the warranty.

Before each use, check all screws to be sure they are tight. Shock and vibration can loosen screws. Do not over tighten any screw.

AIR SUPPLY:
The air must be clean and dry. Dirty and/or wet air will damage the Nailer.

Drywall Dust:

- Using Pneumatic Powernailers in drywall dust conditions will dramatically decrease the life of the Nailer.
- Drywall dust is abrasive, when cycled through the Nailer it will cause excessive wear.

The air source must continuously deliver 80 to 110 psi at 3-1/2 cubic feet of air per minute to operate the Nailer. For operation, connect a 1/4” minimum internal diameter and clean air hose to the Nailer. Be sure the air regulator is set at 90 psi. If the nail is not countersunk below the surface of the wood, turn up the air pressure, but not over 110 psi.

Check for air supply leaks that waste air and starve the Nailer of air thereby reducing its performance. There should be no orifice smaller than 1/4” in the air path between the Regulator and the Nailer.

LUBRICATION:
You must lubricate the Nailer manually. The frequency of lubrication is dependent upon the duty cycle of the Nailer. Continuous duty requires more frequent oiling than intermittent duty.

At least every eight (8) hours place two to four drops of Air Tool Oil, supplied with your Nailer, into the disconnected air line male connector attached to the Nailer.

WARNING: Do not over lubricate the Nailer, excess oil mist or drops will be vented with spent air when over lubricated. Excess oil could stain the wood flooring, walls or furnishings. Dry fire the Nailer, without nails, to purge excess oil, before you begin to nail down flooring. Before storing the Nailer, lubricate and cycle the Nailer in insure internal parts are oil protected from corrosion. **WARNING:** Detergent oil is not recommended and may damage the seals.

TO LOAD MODEL 445 XLL, LL or SL:
Place up to two sticks (200 Powercleats) into the Nail Channel feed slot. Pull back the spring loaded Nail Pusher over the nails until it contacts the last nail and slowly release the Nail Pusher.

TO LOAD MODEL 445 XLS, LS or SS:
Place one stick (100 Powercleats) into the Nail Channel feed slot.

TO LOAD MODEL 445 SN:
Place 1/2 stick (50 Powercleats) into the Nail Channel feed slot.

TO UNLOAD:
To remove nails from the Nail Channel, pull the two round knobs on the Nail Pusher together. This will clear it from the nail path. Then turn the Nailer over so the nails slide out of the channel.

PARTS & SERVICE:
When ordering parts include the part number, part description, Powernailer model and serial number. Be sure to state the quantity of the part(s) required. Contact your Powernail Dealer for the necessary parts.

WARNING: Never work on the Nailer if the air line is attached. Always disconnect the air line from the Nailer first.

NAILER DISASSEMBLY:

TO REPLACE RUBBER BUMPER (#20 or #65):

1. Disconnect the air supply

2. Remove the four (4) cap screws holding the Adapter Foot, Foot and Nail Channel assembly to the main Body (see illustration).

3. Pull the Rubber Bumper out of the cylinder bore. Replace the old Bumper if it shows signs of wear or it is split.

4. Reverse these steps to reassemble the Nailer. Be sure to align the Driving Blade with the slot in the Nail Channel Assembly while you reassemble the Nailer.

NEVER FIRE THE NAILER WITHOUT THE RUBBER BUMPER INSTALLED, IT WILL SEVERELY DAMAGE THE NAILER.

CHANGING A DRIVE BLADE (#14):

1. Disconnect the air supply.

2. Remove the four socket head cap screws holding the Adapter Foot, Foot and Nail Channel Assembly to the body.

3. Remove the Rubber Bumper.

4. Pull the Driving Blade with pliers until the Piston is fully extended outward towards the bottom of the cylinder.

5. Use a 15/16” box wrench (Part #: 09-445-29768) to unscrew the Driving Blade Jam Nut and remove it. Hold the Piston from turning while unscrewing the Jam Nut by holding the piston hex with a 1-1/8” box wrench (Part #: 09-445-29768).

6. Push out the 1/4” diameter blade retaining Dowel Pin and remove the broken Driving Blade stub.

7. Install a new Driving Blade in the slot and replace the Dowel Pin. Screw on the retaining Jam Nut using the same tools. If the Jam Nut becomes worn and loose after frequent removals, it should be replaced.

8. Check the fit, there should be some sideways movement between the Driving Blade and the Jam Nut assembly. This is desirable and helps the blade to align itself with the mating parts.

9. Reassemble the components. Be sure to align the Driving Blade with the slot in the Adapter Foot Assembly.

SEAL REPLACEMENT:

There are 7 seals that may require replacement. We recommend that you have your POWERNAIL Dealer replace the Seals.

SEAL KIT:

You may choose to buy a Seal Replacement Kit and replace the seals yourself. It is good practice to replace all seals at one time regardless if only one seal needs replacement.

SEAL DESCRIPTION & NUMBER:

1. Rubber Seat (#19)
2. Plunger Seal Set (#21)
3. Piston U-Cup Lip Seal (#22)
4. Return Cylinder U-Cup Lip Seal (#23)
5. Piston Rod U-Cup Lip Seal (#24)
6. Plunger Wiper Seal (#25)
7. Return Cylinder O-Ring Gasket (#26)

To change Seals follow these procedures. Be sure the air line is disconnected from the Nailer first before making any repairs.

Consult the illustration for the name and location of the following component parts.

SEAL REPLACEMENT REQUIRES REMOVAL OF THE DRIVING BLADE ASSEMBLY:

1. Disconnect the air supply.
2. Remove Rubber Plunger Cap (#18).
3. Unscrew & remove Body Cap (#2).
4. Push Safety Yoke (#8) aside and unscrew the three #10-32 cap screws holding the Plunger (#12) to the Return Cylinder (#11).

5. Pull the Plunger up and out of the Nailer Body (#1) cavity.

6. Remove the Return Cylinder O-Ring Gasket (#26) located on the top of the Return Cylinder under the Plunger.

7. Turn the Nailer over and remove the four cap screws (#50), that fasten the Adapter Foot and Nail Channel Assembly to the Nailer Body and lift the Assembly off the Body.

8. Remove the Rubber Bumper (#20 or #65).

9. Pull the Driving Blade Assembly out of the Nailer Body by pulling on the Driving Blade.

10. Hold the Piston Rod (#9) with an 11/16 socket over its hex end opposite the Piston. **Do not use pliers or a vise anywhere on the metal parts, they can damage the sealing surfaces.**

11. Use box wrenches to remove the 5/8-18 Jam Nut (#51). Remove the Dowel Pin (#38) and Driving Blade (#14).

12. Unscrew the Piston from the Piston Rod using box wrenches and separate the Piston, Piston Rod and Return Cylinder.

TO REPLACE THE SEALS:

Rubber Seat (#19):
1. Remove the Cylinder Sleeve (#13). The Cylinder Sleeve should slide out of the Nailer Body when you pull out the Driving Blade Assembly.

2. Remove the metal Support Ring (#17) and Rubber Seat from inside the Nailer body. Note that the chamfer on the inside of the Rubber Seat faces the BOTTOM of the Nailer, do not reverse the direction of the chamfer when you replace the Rubber Seat.

3. Replace the Rubber Seat, Support Ring and Cylinder Sleeve. Be sure to re install the steel Cylinder Sleeve with the chamfered inside edge facing the BOTTOM of the Nailer

Plunger Seal Set (#21):
1. Remove the Teflon® Seal and its O-Ring expander from the groove using a bent paper clip or pick. Be sure not to scratch the inside walls of the seal groove with the wire hook.

2. Clean out the seal groove. Place a new O-Ring into the seal groove by stretching it over the Plunger body. Make sure the O-Ring is not twisted in the groove. Place a new Teflon° Seal Ring into the seal groove over the O-Ring.

3. Carefully push the Teflon®Seal Ring over the edge of the Plunger with your thumbs and into the groove. Do this as quickly as possible to reduce stretching of the Teflon®Seal Ring. DO NOT OVER STRETCH THE TEFLON® SEAL RING! Be sure the Teflon® Seal Ring is centered all around the seal groove and not twisted.

4. Wipe off the Seal surface with a clean rag and lubricate it generously with Pneumatic Light Air Tool Oil lubricant.

Piston U-Cup Lip Seal (#22):
1. Remove the old Piston U-Cup Lip Seal from the Piston using a bent paper clip or pick, being careful not to scratch the inside walls of the seal groove or the edge of the Piston with the wire hook.

2. Clean out the seal groove. Place a new U-Cup Lip Seal into the groove. Make sure the lips is not twisted in the groove and the lips face the top of the Nailer See the sketch below.

3. Carefully wipe off the U-Cup Lip Seal surface with a clean rag and lubricate it generously with Pneumatic Light Air Tool Oil lubricant.

Return Cylinder U-Cup Lip Seal (#23):
1. Use a bent paper clip or pick to remove the old U-Cup Lip Seal from the internal seal groove inside the Return Cylinder. Be careful not to scratch the inside walls of the seal groove with the wire hook.

2. Clean out the seal groove. Place a new U-Cup Lip Seal into the groove, be sure it is not twisted in the groove. Be sure the lips are facing the inside of the Return Cylinder as shown in the schematic (page 10-11, 13).

WARNING: The U-Cup Lip Seals #23 and #24 look alike, but they are different, DO NOT mix them up.

3. Carefully wipe off the Lip Seal surface with a clean rag and lubricate it generously with Pneumatic Light Air Tool Oil lubricant.

Piston Rod U-Cup Lip Seal (#24):
1. Remove the old U-Cup Lip Seal from the seal groove with a bent paper clip or pick using care not to scratch the inside walls of the seal groove with the wire hook.

2. Clean out the seal groove and install a new U-Cup Lip Seal. Be sure the Lips are facing the right direction and are not twisted in the groove. See the sketch below.

WARNING: The Lip Seals #23 and #24 look alike, but they are different, DO NOT mix them up.

3. Carefully wipe off the seal surface with a clean rag and lubricate it generously with Pneumatic Light Air Tool Oil lubricant.

Plunger Wiper Metal Cap O-Ring (#25):
1. Use a bent paper clip to pick out the felt Wiper Seal out of its groove in the Body Cap (2).

2. Clean out the groove and insert the new O-Ring (25) in to the groove in the metal body cap (2).

Return Cylinder O-Ring Gasket (#26):
1. Place a new O-Ring Gasket in the groove on top of the Return Cylinder when you reassemble the Driving Blade Assembly.

2. Wipe off the O-Ring Gasket seal surface and lubricate it generously with Pneumatic Light Air Tool Oil lubricant.

REASSEMBLING THE NAILER:

1. Be sure the Rubber Seat, Support Ring and Cylinder are installed in the Body and are facing the correct way.

2. All seal surfaces must be clean and lubricated generously with Pneumatic Light Air Tool Oil lubricant.

Replace any part that shows signs of wear.

3. Use care when installing the seals into their respective cavities. Be sure the Seals are contained in their groove and do not come out as the parts slide together. Generous cavity lead in chamfers have been provided to help Seal installation.

4. Carefully insert the Piston Rod into the return Cylinder and screw the Piston onto the rod. Be sure the Piston is facing the correct way, ears up, hex down.

5. Assemble the Driving Blade, Dowel Pin and Jam Nut on to the Piston Rod.

6. Insert the Driving Blade Assembly up into the bottom of the Nailer Body Cylinder.

7. Be sure there is a new O-Ring Gasket in the top groove of the Return Cylinder.

8. Insert the Plunger into the top cavity of the Body. Line up the holes and install the three Plunger retaining screws. It is important that the three #10-32 screws are tight or air leakage will occur. Our recommendation is to use 1-2 drops of blue Loctite® or similar on the 3 screws.

9. Position the Safety Yoke in the Plunger groove.

10. Install the Body Cap and Plunger Rubber Cap.

11. Turn the Nailer upside down. Install the Rubber Bumper, Nail Channel Assembly and Adapter Foot. Be sure to align up the Driving Blade with the slot in the Foot before the Nailer is closed up.

12. NEVER FIRE THE NAILER WITHOUT THE RUBBER BUMPER INSTALLED, IT WILL DAMAGE THE NAILER.

TO CLEAR A NAIL JAM:

1. It helps to tap the Driving Blade back to the retracted position before trying to remove a jammed nail. A spare Driving Blade works best for this.

2. Try to pull the jammed nail out of the gate with a pair of long nose pliers. If this does not work remove the four (4) cap screws holding the Foot, Gate and Nail Channel Assembly together.

3. Separate the Foot and gate with a screw driver just enough to clear out the jammed nail.

4. Put thread locking compound on all screws and reassemble the components.

For Step-by-Step Videos and Instructions,
Visit our Web Site at: www.Powernail.com

MODELS 445 XLL, XLS, LL, LS, SL, SS & SN PARTS LIST

Item #	PART NO.	DESCRIPTION	Qty Req'd	Tuneup Kit	Seal Kit	Sold Separate or Assembly #
1	09-445-29701	Body	1			F
2	09-445-29702	Cap	1			S
3	09-445-29703	Handle, Long	1			A-6
4	09-445-29703.1	Handle, Short	1			A-7
5	09-445-29704	Handle, Half	1			A-6, A-7, A-17, A-19
6	09-445-29705	Adapter Foot	1			S
7	09-445-29706	Foot	1			S, A-8, A-9, A-16
8	09-445-29707	Safety Yoke	1			S
9	09-445-29710	Piston Rod	1			S, A-11
10	09-445-29711	Piston	1			S, A-11
11	09-445-29830	Return Cylinder	1			S, A-11
12	09-445-29831	Plunger	1			S, A-11
13	09-445-29715	Cylinder Sleeve	1			S
14	09-445-29718	Driving Blade	1	TU		S, A-11
15	09-445-29719	Body Plate (.062 Thick)	1			S
16	09-445-29720	Trigger	1			S, A-6, A-7, A-17, A-19
17	09-445-29721	Support Ring	1			S
18	09-445-29722	Rubber Cap	1	TU		S
19	09-445-29723	Rubber Seat	1	TU	SEAL	S, A-5, A-11
20	09-445-29724	Rubber Bumper (Not for Surface Nailer)	1	TU		S, A-11
21	09-445-29725	Plunger Seal Set	1	TU	SEAL	S, A-5, A-11
22	09-200-3026	Piston U-cup Seal	1	TU	SEAL	S, A-5, A-11
23	09-200-3027	Return Cylinder U-cup Seal	1	TU	SEAL	S, A-5, A-11
24	09-200-3028	Piston Rod U-cup Seal	1	TU	SEAL	S, A-5, A-11
25	09-445-29729	Plunger Wiper Metal Cap O-Ring	1	TU	SEAL	S, A-5
26	09-445-29731	Return Cylinder O-ring Gasket	1	TU	SEAL	S, A-5, A-11
27	09-445-29732	Trigger Cable, Long	1			S, A-6
28	09-445-29732.1	Trigger Cable, Short	1			S, A-7
29	09-445-29733	Safety Yoke Springs	2			S
30	09-445-29734	Nail Pusher Spring	1			A-8, A-9, A-10, A-16
31	09-445-29734.1	Spool (For Nail Pusher Spring)	2			A-8, A-9, A-10, A-16
32	09-445-29735	Nail Pusher	1			A-8, A-9, A-10, A-16
33	09-445-29735.2	Nail Pusher Knob	1			A-8, A-9, A-10, A-16
34	09-445-29736	1/2" Adapter Pad (Accessory)	1			S, A-1
35	09-445-29737	5/8" Adapter Pad (Standard)	1			S, A-2
36	09-445-29738	3/4" Adapter Pad (Standard)	1			S, A-3
37	09-445-29739	1/4" X 3/4" Dowel Pin (Trigger)	1			S, A-6, A-7,A-17, A-19
38	09-445-29740	1/4" X 1/2" Dowel Pin (Drv. Blade)	1	TU		S, A-11
39	09-445-29815	Handle, Extra Long	1			A-19
40	09-445-29816	Trigger Cable, Extra Long	1			S, A-19
41	09-445-29817	Nail Channel, Long	1			A-8
42	09-445-29818	Nail Channel, Short	1			A-9
43	09-445-29820	Gate Plate	1	TU		S, A-8, A-9, A-16
44	09-445-29821	Gate	1	TU		S, A-8, A-9, A-16
45	09-445-29741	1/8" X 5/8" Roll Pin (Gate)	2			S, A-8, A-9, A-17
46	09-445-29742	1/4-20 x 7/8" S.H.C.S. (SN & XL Only)	2			S, A-17
47	09-445-29743	1/4-20 x 1" S.H.C.S. (Cover)	4			S
48	09-445-29744	1/4-20 x 3/4" S.H.C.S. 4 w/patch (Handle Base)	4			S
49	09-445-29745	#10-32 x 1-1/4" S.H.C.S. (Knob)	1			S, A-8, A-9, A-10, A-16
50	09-445-29747	1/4-20 x 1-1/4" S.H.C.S. (Foot)	4			S
51	09-445-29748	5/8-18 JAM NUT (Drive Blade)	1	TU		S, A-11
52	09-445-29750	#8-32 x 1-1/2" F.H.C.S. (Spacer)	2			S, A-8, A-9, A-16

MODELS 445 XLL, XLS, LL, LS, SL, SS & SN PARTS LIST

Item #	PART NO.	DESCRIPTION	Qty Req'd	Tuneup Kit	Sold Separate or Assembly #
53	09-445-29751	#8-32 Locknut (Spacer)	2		S, A-8, A-9, A-16
54	09-445-29754	#10-32 x 1/2" S.H.C.S. w/Patch (Foot)	4		S, A-8, A-9, A-16
55	09-445-29832	#10-32 x 3/4" S.H.C.S. (Plunger)	3		S, A-11
56	09-445-29756	1/4" x 1" SPACER (Channel)	2		S, A-8, A-9, A-16
57	09-445-29757	1/4-20 x 1/2" F.H.C.S. w/Patch (Pad)	3		S
58	09-445-29758	1/4" Split Ring Lock Washer (Foot)	4		S
59	09-445-29759	3/8" Npt 45° Street Elbow	1		S
60	09-445-29760	#8-32 x 1/4" B.H.C.S. (Cable)	1		S
61	09-445-29790	Sn Nail Channel	1		A-16
62	09-445-29791	Sn 3/8" Npt 90° Street Elbow	1		S
63	09-445-29792	SN #10-32 x 3/8" F.H.C.S. (PAD)	4		S
64	09-445-29795	Sn Trigger Cable	1		S, A-17
65	09-445-29796	Sn Rubber Bumper	1	TU	S
66	09-445-29797	Sn No Mar Pad	1		S
67	09-445-29798	Sn Handle	1		S, A-17
68	09-445-29799	Sn Adapter Foot	1		S
69	09-445-29822	#10-32 x 3/4" S.H.C.S. w/Patch (Gate)	4	TU	S, A-8, A-9, A-16
70	09-445-29836	#10-32 x 3/8" S.H.C.S. (Gate)	2	TU	S, A-8, A-9, A-16
71	09-445-29819	.030 Plastic Shim	2		S
72	09-445-29738.1	22mm Adapter Pad	1		S
73	09-445-297441	1/4-20 X 3/4" S.H.C.S. (Handle Half)	2		S, A-6, A-7, A-17, A-19

KEY: S=Sold Separately, A= Sold as part of assembly, Seal Kit, TU=Tune-up Kit, F=Factory replacement only.

Assemblies, Kits & Accessories

ITEM #	PART NO.	DESCRIPTION	QTY. REQ'D
A-1	09-445-29736	1/2" ADAPTER PAD	1
A-2	09-445-29737	5/8" ADAPTER PAD	1
A-3	09-445-29738	3/4" ADAPTER PAD	1
A-4	09-445-29757A	6 OZ. INDUSTRIAL LIGHT AIR TOOL OIL	1
A-5	09-200-3058A	SEAL KIT (1 EACH OF ALL SEALS)	1
A-6	09-445-29759A	LONG HANDLE ASSEMBLY	1
A-7	09-445-29760A	SHORT HANDLE ASSEMBLY	1
A-8	09-445-29761A	LONG NAIL CHANNEL ASSEMBLY	1
A-9	09-445-29762A	SHORT NAIL CHANNEL ASSEMBLY	1
A-10	09-445-29763A	NAIL PUSHER ASSEMBLY	1
A-11	09-445-29764A	DRV. BLADE ASSEMBLY W/RUBBER SEAT	1
A-13	09-445-29766	3/8" M&F COUPLING SET	1
A-15	09-445-29768	BOX WRENCH	2
A-16	09-445-29769A	SN NAIL CHANNEL ASSEMBLY	1
A-17	09-445-29770A	SN HANDLE ASSEMBLY	1
A-19	09-445-29824A	EXTRA LONG HANDLE ASSEMBLY	1
A-24	09-AW-445	ALLEN WRENCH SET	1
A-25	09-445-TU-KIT	TUNE UP KIT MODEL 445XLL, XLS, LL, LS, SL, SS	1
A-26	09-445SN-TU-KIT	TUNE UP KIT 445SN SURFACE NAILER	1
	06-99420	NAILER SHOE	1

KEY: S=Sold Separately, A= Sold as part of assembly, K=Sold as part of a Kit

SCHEMATIC VIEW

MODELS 445 XLL, XLS, LL, LS, SL, and SS

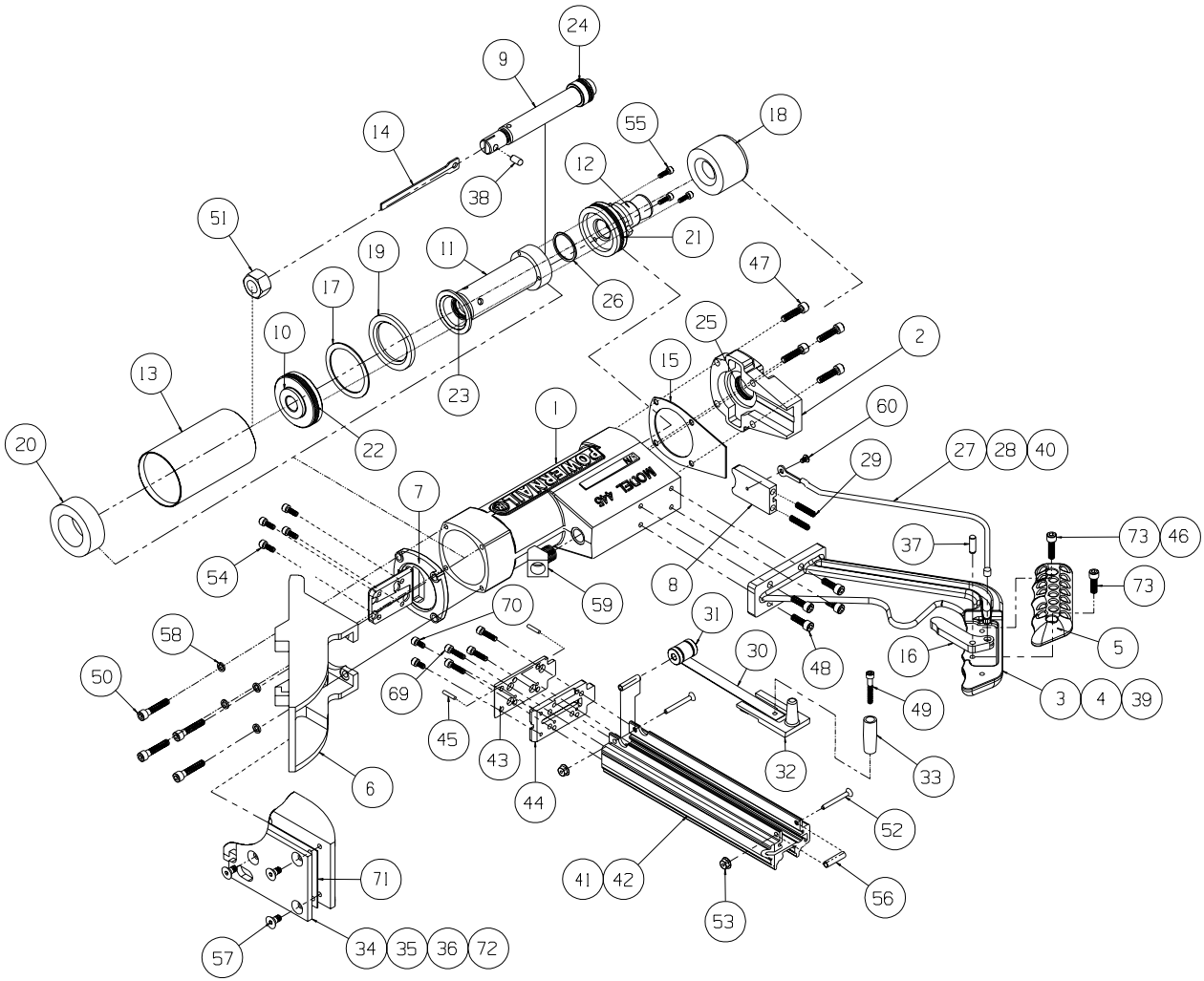

Kits Available - For use on all Model 445 Tongue & Groove Powernailers (Not 445SN)

Seal Kit (1 Each Of All Seals)	Tune-up Kit
Part #: 09-2003058A Schematic #'s: 19,21,22,23,24,25,26	Part #: 09-445TUKIT Schematic #'s: 14,18,19,20, 21,22,23,24,25,26,38,43,44, 51,69(4),70(2)

*Schmatic #20 bumper not for use in 445SN Surface Nailer -see 445SN Schematic.

For Step-by-Step Videos and Instructions,
Visit our Web Site at: www.Powernail.com

SCHEMATIC VIEW

445 SN SURFACE NAILER

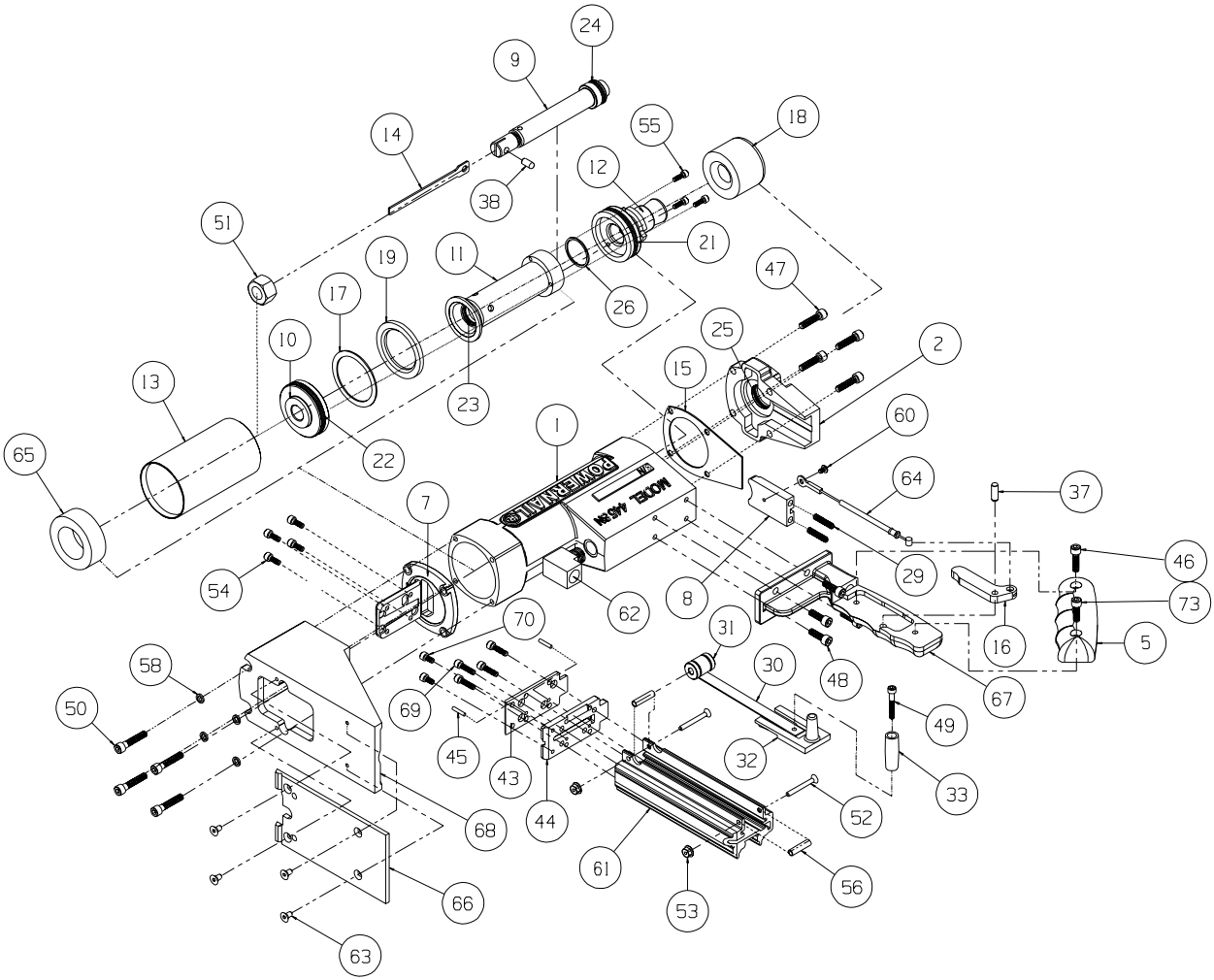

Kits Available - For use on the Model 445SN Surface Nailer

Seal Kit (1 Each Of All Seals)	Tune-up Kit
Part #: 09-2003058A Schematic #'s: 19,21,22,23,24,25,26	Part #: 09-445SNTUKIT Schematic #'s: 14,18,19, 21,22,23,24,25,26,38,43,44, 51,65,69(4),70(2)

*445SN Surface Nailer uses model specific bumper #65, 09-44529796

For Step-by-Step Videos and Instructions, Visit our Web Site at: www.Powernail.com

NAILER SAFETY DECALS

Warning!

• Read and understand the tool labels and manuals before operating. • Operators and others in work area MUST wear EYE and EAR protection. • Use safety glasses with side shields. • NEVER point tool at yourself or others in the work area. • Only connect air to an unloaded tool and always keep tool pointed in a safe direction. • Disconnect air when clearing jams, servicing or when tool is not in use. • Use only clean, dry, regulated air not exceed 110 psi. • Never use oxygen or other bottled gasses-explosion may occur. • Do not tie down, alter or remove the Safety Trigger.

CAUTION

1. Do not tie down the Safety Trigger
2. To prevent accidental discharge never attach air hose to loaded Nailer.

Caution:
To Prevent Accidental Discharge Never Attach Air Hose To Loaded Nailer

CAUTION:
Lubricate Nailer with 2-4 drops of Industrial Light Oil for every 8 hours of use.

↑ **RELOAD**

Refill the nail channel with a clip of Powercleats when empty.

Pull the Nail-Pusher assembly to the back of the channel when cleats are reloaded.

Nailer is activated by striking the plunger. Do not work on scaffolding, ladders, elevated or uneven surfaces where the nailer could fall and self-activate. Do not leave air attached to the Nailer when moving from one install location to another.

PNEUMATIC SEAL PART NUMBERS AND LOCATIONS

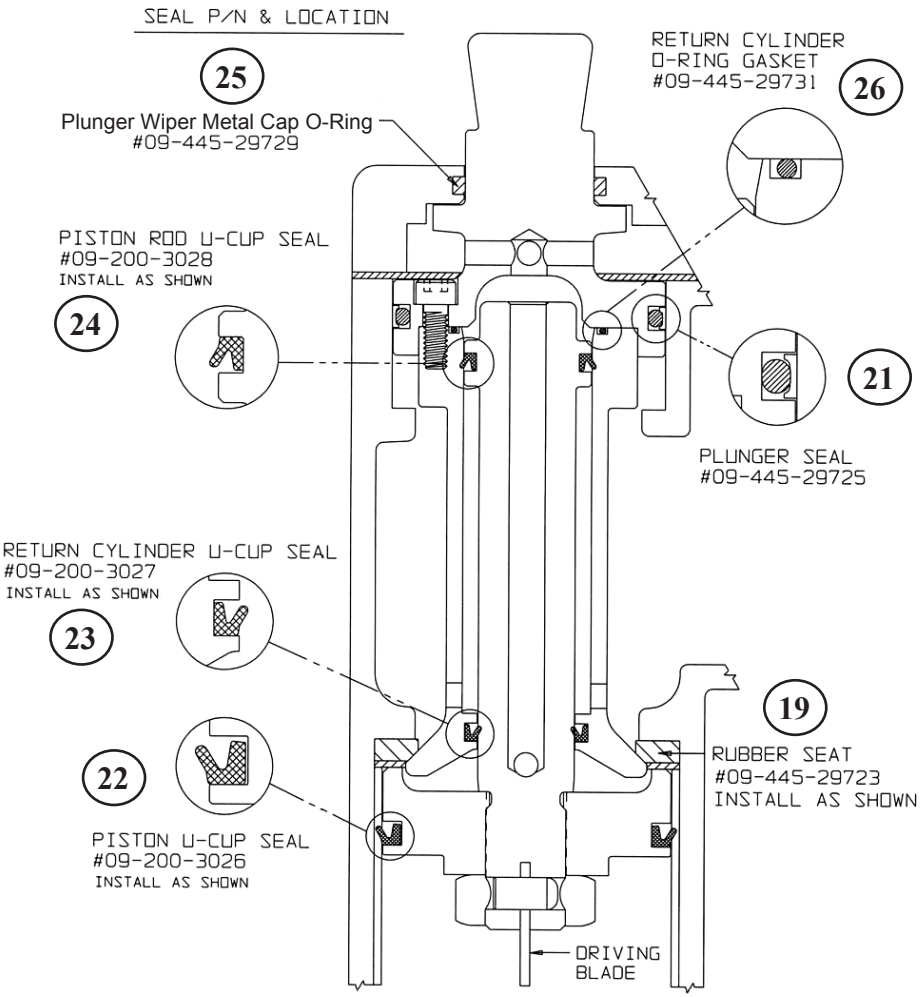

POWERCLEATS LENGTH DETERMINATION CHART

This chart will assist you in determining the proper length of Powercleats to use for various thicknesses of flooring. Approximate vertical penetration of the Powercleat under the hardwood floor is shown for each application. This is only a guide. Results should be tested in the field before proceeding.

Nail Penetration for 3/4" and 5/8" Underlayment

2″ 16 GAGE POWERCLEATS®

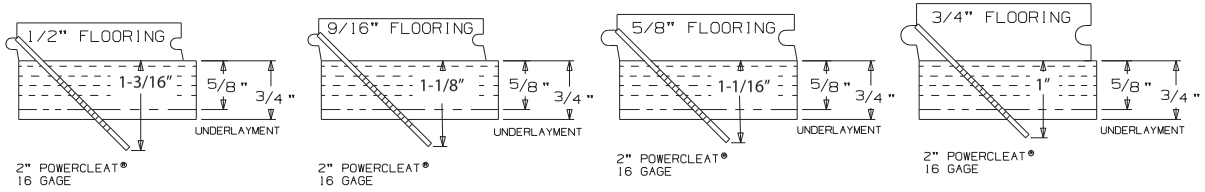

1-3/4″ 16 GAGE POWERCLEATS®

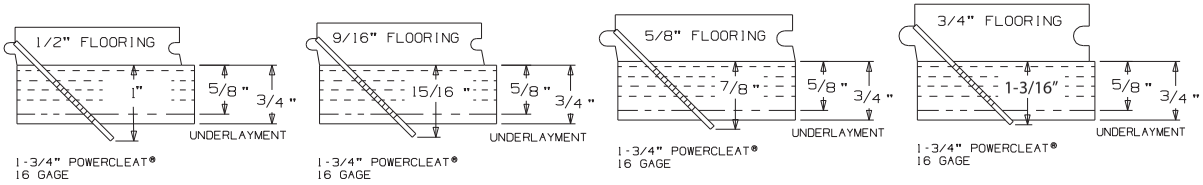

1-1/2″ 16 GAGE POWERCLEATS®

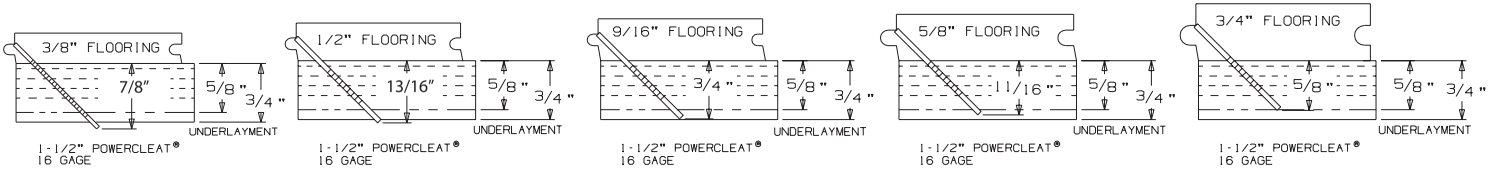

©Powernail Company 2012

POWERNAILER MODEL 445 TROUBLE SHOOTING CHART

	PROBLEM	POSSIBLE CAUSE	SOLUTION
1	Driving blade does not retract	1. Zero or Low air pressure	Check air supply for 80 psi minimum to 110 psi maximum
		2. Lack of lubrication	Manually lubricate through male air inlet fitting
		3. Excessive dirt inside nailer	Disassemble and clean
		4. Bent or burred driving blade	Replace driving blade (#14)
		5. Seals worn out	Replace all seals (Seal Kit)
		6. U-Cup Lip Seals installed upside down	Replace all seals (Seal Kit)
2	Driving blade retracts slowly	1. Low air pressure	Turn up air pressure to 80-110 psi max
		2. Bent or burred driving blade	Replace driving blade (#14)
		3. Air supply restricted by small orifice	Use 1/4" minimum diameter air fittings
		4. U-Cup Lip Seals installed upside down	Replace all seals (Seal Kit)
		5. Excessive dirt inside nailer	Disassemble, clean and lubricate
3	Nail is not countersunk	1. Low air pressure	Turn up air pressure to 80-110 psi max
		2. Broken Driving Blade	Replace Driving Blade (#14)
		3. Nail hit hard surface	Move from obstruction
		4. Piston U-Cup Lip Seal installed upside down	Replace all seals (Seal Kit)
		5. Driving blade jam nut came loose	Retighten or replace jam nut (#51)
		6. Worn out gate	Replace gate. (#44)
4	Nailer leaks air	1. Air supply fittings loose	Tighten all air line fitting connections
		2. Excess air pressure blew out seals	Check air supply for 110 psi maximum—replace all seals
		3. Plunger screws loose	Tighten 3 plunger screws (#55)
		4. Cracked or damaged body	Replace body (#1)
		5. Seals worn out	Replace all seals (Seal Kit)
		6. Seals need to be seated	Dry fire Nailer
5	Bottom of nailer cracked off	1. Operated without rubber bumper installed	Replace damaged parts
		2. Excessive air pressure used	Replace damaged parts
6	Nails jam in nailer	1. Not using 18 gage Powercleats nails	Use 16 gage Powercleats nails only
		2. Continued use after a short hit	Clear nail immediately after short hit
		3. Nail pusher damaged or spring broken	Replace nail pusher assembly (#A-10)
		4. Nail channel lose	Tighten nail channel retaining screws (#54,#50)
		5. Bent nail stuck in nail guide	Disassemble and clear out bent nail
		6. Hit another set nail or hard object	Move from obstruction
		7. Nail gate worn out	Replace nail gate (#44)
7	Plunger locked up—won't move or fire	1. Safety trigger not being depressed	Replace damaged plunger, safety yoke and plunger seal (#12,#8,#21)
		2. Lack of lubrication	Manually lubricate through male air inlet fitting

Visit www.Powernail.com

- Dealer Locator
- Rental Locator
- Parts Store
- Product Information
- Repair Tech Videos
- Cool Tools Cleat Calculator
- Cleat Depth Chart
- Training Schools

Featured Accessory Products

Powerjack® Model 500
Truly a Tinker's TOOL, the POWERJACK Model 500 is designed to push or pull flooring strips into place and hold them tightly. The PowerJack Model 500 self adjusts from 5/16" to 3/4" thickness flooring. It can be used to either push or pull wood flooring strips into place and ratchets tightly for hands free operation. The base of the PowerJack 500 has mounting holes for mid-floor use. Simply screw nail the PowerJack 500 to your sub floor -in front of your flooring strips -and ratchet the flooring strips tight. Also great for under cabinet and kick plate installation.
Part number: 06-99650

Powerjack
Model 500

The PowerPalm™
"The PowerPalm is the industries best solution to blind nailing close to the wall. Saves both, time and money!"
Pressure activated...simply press down, and let the tool do the work. The Power Palm will allow blind nailing closer to the wall and reduce the amount of face nailing. "Blind nail, top nail...tight spots and corners, the PowerPalm gets them all!" Featuring 360 degree swivel tip for fitting awkward or tight spaces. Magnetic cleat holder keeps nail in position. Uses both 16 gage and 18 gage Powercleats–Use the same fastener throughout your install! **Part number: 02-PALM001**

Pneumatic PowerPalm™

Powernailer® TOOL BAG™
The TOOL BAG holds all Powernailer® configurations including the FLEX and POWER ROLLER models. The Powernail TOOL BAG is built tough with a double wall of padded industrial nylon to protect your tools. Corners are reinforced with leather for durability. Zippered storage pouch on the inside (12" x 6"). The Tool Bag has two durable handles which can be used for carrying over your shoulder.
Dimensions: 20" base, 7" deep and 20" Tall.
Part number: 06-99201

TOOL BAG