Owner's Manual & Safety Instructions

Save This Manual Keep this manual for the safety warnings and precautions, assembly, operating, inspection, maintenance and cleaning procedures. Write the product's Date Code in the back of the manual near the assembly diagram (or month and year of purchase if product has no number). Keep this manual and the receipt in a safe and dry place for future reference. 25e

BANKS®

2-IN-1

Flooring Nailer/Stapler

Visit our website at: https://www.harborfreight.com
Email our technical support at: productsupport@harborfreight.com

64268

When unpacking, make sure that the product is intact and undamaged. If any parts are missing or broken, please call 1-800-444-3353 as soon as possible.

Copyright© 2025 by Harbor Freight Tools®. All rights reserved.
No portion of this manual or any artwork contained herein may be reproduced in any shape or form without the express written consent of Harbor Freight Tools.
Diagrams within this manual may not be drawn proportionally. Due to continuing improvements, actual product may differ slightly from the product described herein. Tools required for assembly and service may not be included.

⚠WARNING

Read this material before using this product. Failure to do so can result in serious injury. SAVE THIS MANUAL.

Table of Contents

Safety 3
Specifications 7
Setup 9
Operation.....12
Maintenance.....14
Parts List and Diagram.....18
Warranty 20

SAFETY

SETUP

OPERATION

MAINTENANCE

BANKS®

WARNING SYMBOLS AND DEFINITIONS	
⚠	This is the safety alert symbol. It is used to alert you to potential personal injury hazards. Obey all safety messages that follow this symbol to avoid possible injury or death.
⚠ DANGER	Indicates a hazardous situation which, if not avoided, will result in death or serious injury.
⚠ WARNING	Indicates a hazardous situation which, if not avoided, could result in death or serious injury.
⚠ CAUTION	Indicates a hazardous situation which, if not avoided, could result in minor or moderate injury.
NOTICE CAUTION	Addresses practices not related to personal injury.

Symbol	Property or statement
PSI	Pounds per square inch of pressure
CFM	Cubic Feet per Minute flow
SCFM	Cubic Feet per Minute flow at standard conditions
NPT	National pipe thread, tapered
NPS	National pipe thread, straight
	WARNING marking concerning Risk of Eye Injury. Wear ANSI-approved safety goggles with side shields.

Symbol	Property or statement
	Warning marking concerning Risk of Puncture Injury. Wear heavy-duty work gloves.
	Read the manual before set-up and/or use.
	WARNING marking concerning Risk of Hearing Loss. Wear hearing protection.
	WARNING marking concerning Risk of Respiratory Injury. Wear NIOSH-approved dust mask/respirator.
	WARNING marking concerning Risk of Explosion.

Table A: Symbol Definitions

IMPORTANT SAFETY INSTRUCTIONS

INSTRUCTIONS PERTAINING TO A RISK OF FIRE, ELECTRIC SHOCK, OR INJURY TO PERSONS

WARNING – When using tools, basic precautions should always be followed, including the following:

General

To reduce the risks of electric shock, fire, and injury to persons, read all the instructions before using the tool.

Work Area

a. **Keep the work area clean and well lighted.** Cluttered benches and dark areas increase the risks of electric shock, fire, and injury to persons.

b. **Do not operate the tool in explosive atmospheres, such as in the presence of flammable liquids, gases, or dust.** The tool is able to create sparks resulting in the ignition of the dust or fumes.

c. ***Keep bystanders, children, and visitors away while operating the tool.*** Distractions are able to result in the loss of control of the tool.

Personal Safety

a. ***Stay alert. Watch what you are doing and use common sense when operating the tool. Do not use the tool while tired or under the influence of drugs, alcohol, or medication.*** A moment of inattention while operating the tool increases the risk of injury to persons.

b. **Dress properly. Do not wear loose clothing or jewelry. Contain long hair. Keep hair, clothing, and gloves away from moving parts.** Loose clothes, jewelry, or long hair increases the risk of injury to persons as a result of being caught in moving parts.

c. **Do not overreach. Keep proper footing and balance at all times.** Proper footing and balance enables better control of the tool in unexpected situations.

d. **Use safety equipment.** A dust mask, non-skid safety shoes and a hard hat must be used for the applicable conditions. Wear heavy-duty work gloves during use.

e. **Always wear eye protection.** Wear ANSI-approved safety goggles with side shields.

f. **Always wear hearing protection when using the tool.** Prolonged exposure to high intensity noise is able to cause hearing loss.

g. **Do not attach the hose or tool to your body.** Attach the hose to the structure to reduce the risk of loss of balance if the hose shifts.

h. **Always assume that the tool contains fasteners.** Do not point the tool toward yourself or anyone whether it contains fasteners or not.

i. **WARNING – Do not drive fastener on top of another fastener.** This is able to cause the fastener to be deflected and hit someone, or cause the Tool to react and result in a risk of injury to persons.

Tool Use and Care

a. ***Use clamps or another practical way to secure and support the workpiece to a stable platform.*** Holding the work by hand or against the body is unstable and can lead to loss of control.

b. **Do not force the tool.** Use the correct tool for the application. The correct tool will do the job better and safer at the rate for which the tool is designed.

c. **Disconnect the tool from the air source before making adjustments, doing tool maintenance, clearing jams, leaving work area, loading, or unloading the tool.** Such precautionary measures reduce the risk of injury to persons.

d. ***Store the tool when it is idle out of reach of children and other untrained persons.*** A tool is dangerous in the hands of untrained users.

e. **Maintain the tool with care.** A properly maintained tool reduces the risk of binding and is easier to control.

f. **Check for misalignment or binding of moving parts, breakage of parts, and any other condition that affects the tool's operation.** If damaged, have the tool serviced before using. Many accidents are caused by poorly maintained tools. There is a risk of bursting if the tool is damaged.

g. **Use only accessories that are identified by the manufacturer for the specific tool model.** Use of an accessory not intended for use with the specific tool model, increases the risk of injury to persons.

h. **Use only those fasteners listed in the Specifications chart of this manual.** Fasteners not identified for use with this tool by the tool manufacturer are able to result in a risk of injury to persons or tool damage when used in this tool.

Service

a. ***Tool service must be performed only by qualified repair personnel.***

b. **When servicing a tool, use only identical replacement parts. Use only authorized parts.**

c. **Use only the lubricants supplied with the tool or specified by the manufacturer.**

Air Source

a.
Never connect to an air source that is capable of exceeding 200 PSI. Over pressurizing the tool may cause bursting, abnormal operation, breakage of the tool or serious injury to persons. Use only clean, dry, regulated compressed air at the rated pressure or within the rated pressure range as marked on the tool. Always verify prior to using the tool that the air source has been adjusted to the rated air pressure or within the rated air-pressure range.

b. ***Never use oxygen, carbon dioxide, combustible gases or any bottled gas as an air source for the tool.*** Such gases are capable of explosion and serious injury to persons.

SAVE THESE INSTRUCTIONS.

Specific Safety Instructions

1. **Operators and others in work area MUST wear ANSI-approved safety goggles with side shields during use.** The employer is responsible to enforce the use of eye protection by the operator and others in the work area.
2. **Avoid unintentional discharge.** Always use caution to avoid accidentally striking the Head Cap. This product **does not** feature a Workpiece Contact.
3. Always assume the Tool contains fasteners.
4. Do not point the Tool toward yourself or anyone whether it contains fasteners or not.
5. Do not actuate the Tool unless the Tool is placed firmly against the workpiece.
6. Respect the Tool as a working implement.
7. No horseplay. This Tool is not a toy and can be deadly if misused.
8. Do not remove, tamper with, or otherwise cause the Tool operating controls to become inoperable.
9. Do not operate the Tool if any portion of the Tool operating controls is inoperable, disconnected, altered, or not working properly.
10. Disconnect the Tool from the air supply when:
    a. Unattended.
    b. Performing any maintenance or repair.
    c. Clearing a jam.
    d. Moving the Tool to a new location.
11. Do not make any modifications to this Tool.
12. Refer to the Tool maintenance instructions for detailed information on the proper maintenance of the Tool.
13. Drive fasteners into an appropriate work surface only. Do not attempt to discharge fasteners into surfaces too hard to penetrate. Do not drive fasteners on top of other fasteners, or at too steep of an angle. Fasteners can ricochet causing personal injury.
14. Do not drive fasteners too close to the edge of a workpiece. They may split the workpiece and fly free, causing personal injury.
15. Keep clear of the workpiece near the area being fastened. Fasteners may bend sideways during driving, causing them to exit the workpiece at an unexpected point, causing personal injury.
16. Transport Tool safely. Always disconnect air supply when moving the Tool. Carry the Tool by the handle and avoid contact with the Head Cap.
17. Hold Tool away from head and body. During operation the Tool may kick back causing injury.
18. Do not drive fasteners into a workpiece that has people, utility lines, or other objects behind or inside it.
19. Keep balance while using this Tool. Keep area below clear if working in an elevated location, and secure air hose to prevent falls from bystanders accidentally pulling on it.
20. Obey the manual for the air compressor used to power this Tool.
21. Install an in-line shutoff valve to allow immediate control over the air supply in an emergency, even if a hose is ruptured.
22. Do not engrave or stamp anything into the housing to avoid weakening it.
23. The warnings and precautions discussed in this manual cannot cover all possible conditions and situations that may occur. It must be understood by the operator that common sense and caution are factors which cannot be built into this product, but must be supplied by the operator.

Vibration Precautions

This Tool vibrates during use.
Repeated or long-term exposure to vibration may cause temporary or permanent physical injury, particularly to the hands, arms and shoulders.
To reduce the risk of vibration-related injury:

1. Anyone using vibrating tools regularly or for an extended period should first be examined by a doctor and then have regular medical check-ups to ensure medical problems are not being caused or worsened from use. Pregnant women or people who have impaired blood circulation to the hand, past hand injuries, nervous system disorders, diabetes, or Raynaud's Disease should not use this Tool.
   If you feel any symptoms related to vibration (such as tingling, numbness, and white or blue fingers), seek medical advice as soon as possible.
2. Do not smoke during use. Nicotine reduces the blood supply to the hands and fingers, increasing the risk of vibration-related injury.
3. Wear suitable gloves to reduce the vibration effects on the user.
4. Use tools with the lowest vibration when there is a choice between different processes.
5. Include vibration-free periods each day of work.
6. Grip Tool as lightly as possible (while still keeping safe control of it). Let the Tool do the work.
7. To reduce vibration, maintain Tool as explained in this manual. If abnormal vibration occurs, stop immediately.

SAVE THESE INSTRUCTIONS.

BANKS®

Specifications

Maximum Air Pressure	90 PSI
Air Inlet	1/4"–18 NPT
Air Consumption	4 CFM @ 90 PSI
Nail Type	16 Gauge, 1-1/2"–2" Long, Cleat Nail
Staple Type	15-1/2 Gauge, 1"–2" Long, 1/2" Crown Staple
Magazine Capacity	100 Cleat Nails (side loading) or 80 Crown Staples (top loading)

BANKS®

Components and Controls

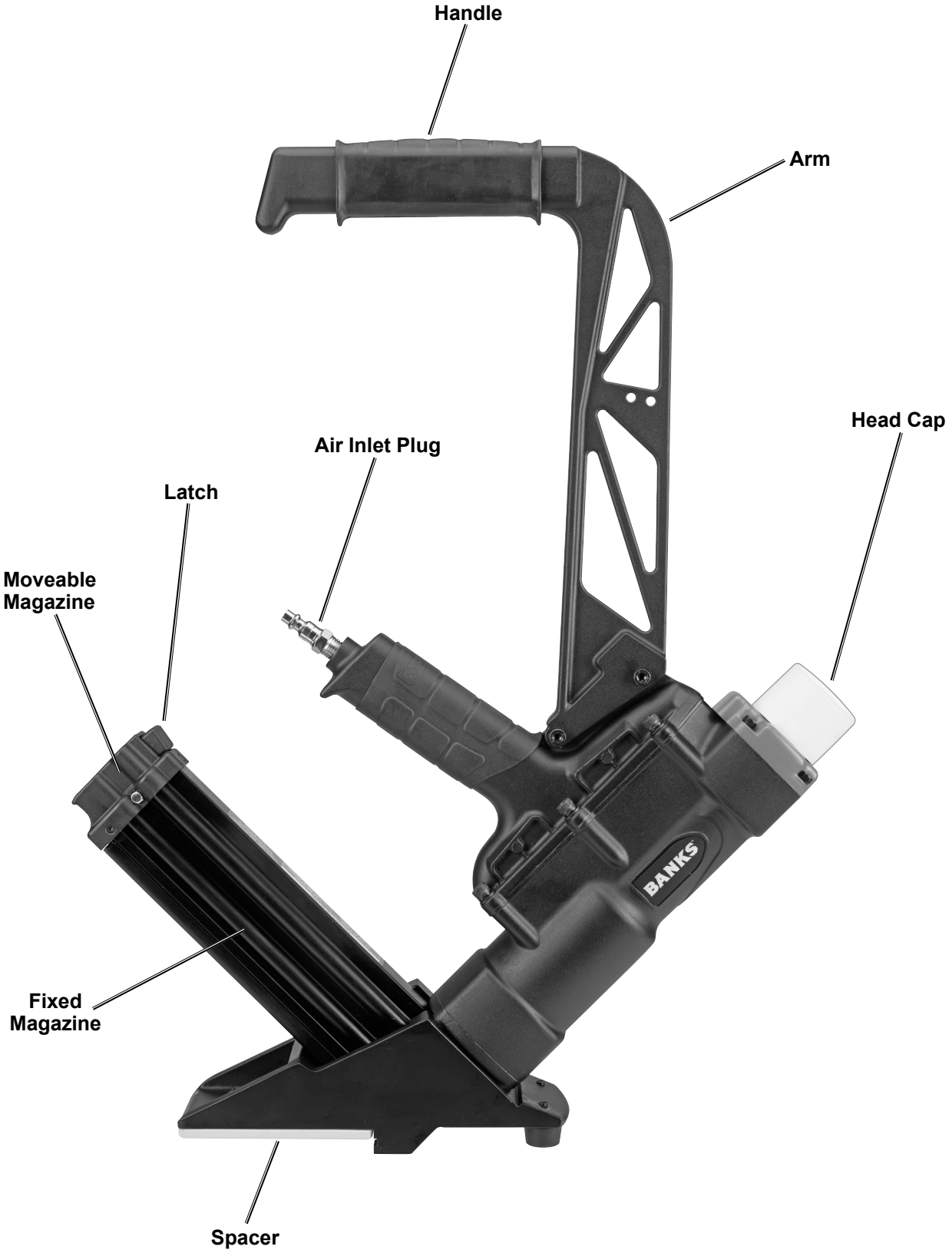

Initial Tool Set Up/Assembly

Read the ENTIRE IMPORTANT SAFETY INFORMATION section at the beginning of this manual including all text under subheadings therein before set up or use of this product.

Note: For additional information regarding the parts listed in the following pages, refer to the Assembly Diagram near the end of this manual.

Air Supply

WARNING

TO PREVENT EXPLOSION:
Use only clean, dry, regulated, compressed air to power this Tool. Do not use oxygen, carbon dioxide, combustible gases, or any other bottled gas as a power source for this Tool.

1. Incorporate a filter, regulator with pressure gauge, oiler, in-line shutoff valve, and quick coupler for best service, as shown on Figure A on page 10 and Figure B on page 11. **An in-line shutoff ball valve is an important safety device because it controls the air supply even if the air hose is ruptured. The shutoff valve should be a ball valve because it can be closed quickly.**

Note: If an automatic oiler system is not used, add a few drops of Pneumatic Tool Oil into the airline connection before operation. Add a few more drops after each hour of continual use.

Note: This air Tool may be shipped with a protective plug covering the air inlet. Remove this plug before set up.

2. Attach an air hose to the compressor's air outlet. Connect the air hose to the air inlet of the Tool. Other components, such as a coupler plug and quick coupler, will make operation more efficient, but are not required.

WARNING! TO PREVENT SERIOUS INJURY FROM ACCIDENTAL DISCHARGE:
Do not install a female quick coupler on the Tool. Such a coupler contains an air valve that will allow the air Tool to retain pressure and operate accidentally after the air supply is disconnected.

Note: Air flow, and therefore Tool performance, can be hindered by undersized air supply components.

3. The air hose must be long enough to reach the work area with enough extra length to allow free movement while working.
4. Empty the Tool's Magazine.
5. Close the in-line safety valve between the compressor and the Tool.
6. Turn on the air compressor according to the manufacturer's directions and allow it to build up pressure until it cycles off.
7. Adjust the air compressor's output regulator so that the air output is enough to properly power the Tool, but the output will not exceed the Tool's maximum air pressure at any time. Adjust the pressure gradually, while checking the air output gauge to set the right pressure range.
8. The air pressure setting must not exceed job site regulations/restrictions.
9. Inspect the air connections for leaks. Repair any leaks found.
10. If the Tool will not be used at this time, turn off and detach the air supply and safely discharge any residual air pressure to prevent accidental discharge.

Note: Residual air pressure should not be present after the Tool is disconnected from the air supply. However, it is a good safety measure to attempt to discharge the Tool in a safe fashion after disconnecting to ensure that the Tool is disconnected and unpowered.

BANKS

Figure A: Portable Air Supply Setup

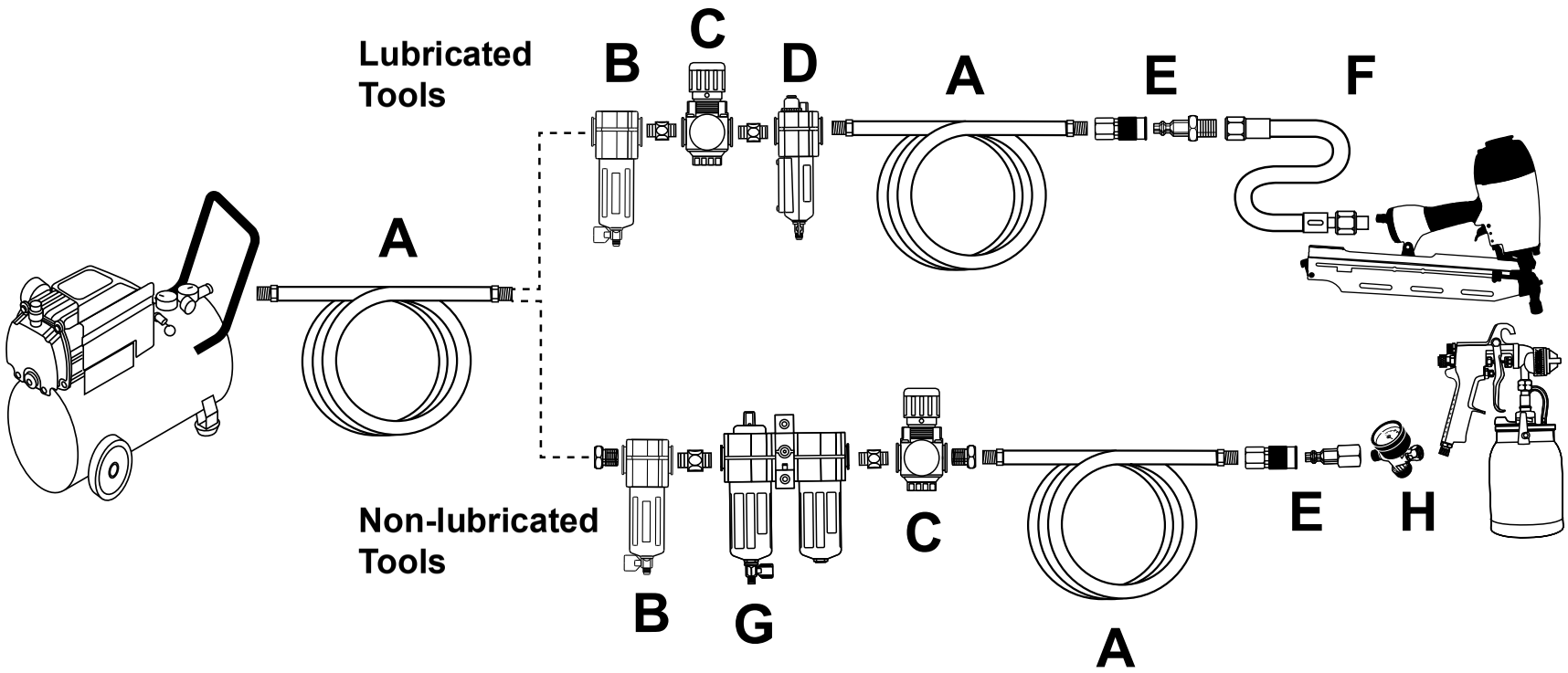

	Description	Function
A	Air Hose	Connects air to Tool
B	Filter	Prevents dirt and condensation from damaging Tool or workpiece
C	Regulator	Adjusts air pressure to Tool
D	Lubricator (optional)	For air Tool lubrication
E	Coupler and Plug	Provides quick connection and release
F	Leader Hose (optional)	Increases coupler life
G	Air Cleaner / Dryer (optional)	Prevents water vapor from damaging workpiece
H	Air Adjusting Valve (optional)	For fine tuning airflow at Tool

Figure B: Stationary Air Supply Setup

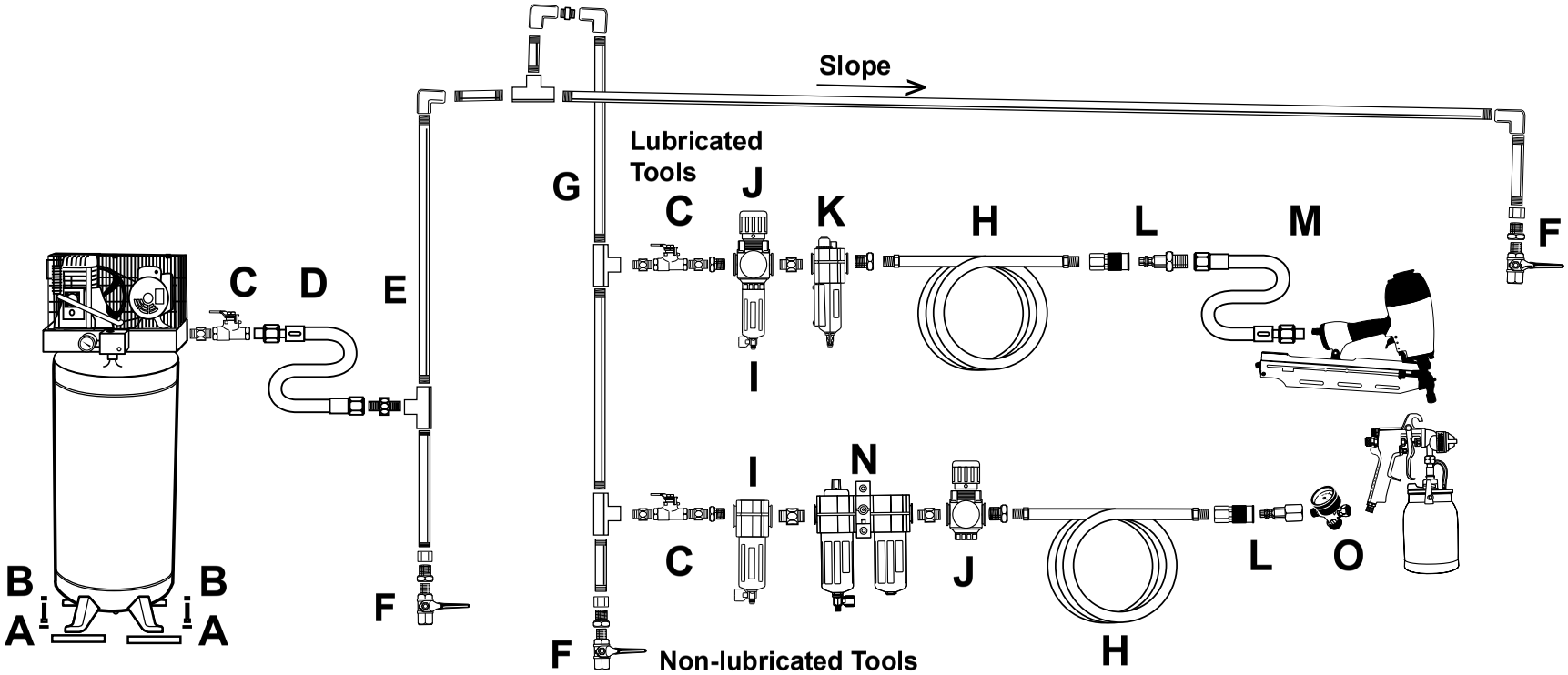

	Description	Function
A	Vibration Pads	For noise and vibration reduction
B	Anchor Bolts	Secures air compressor in place
C	Ball Valve	Isolates sections of system for maintenance
D	Isolation Hose	For vibration reduction
E	Main Air Line - 3/4″ minimum recommended	Distributes air to branch lines
F	Ball Valve	To drain moisture from system
G	Branch Air Line -1/2″ minimum recommended	Brings air to point of use
H	Air Hose	Connects air to Tool
I	Filter	Prevents dirt and condensation from damaging Tool or workpiece
J	Regulator	Adjusts air pressure to Tool
K	Lubricator (optional)	For air Tool lubrication
L	Coupler and Plug	Provides quick connection and release
M	Leader Hose (optional)	Increases coupler life
N	Air Cleaner / Dryer (optional)	Prevents water vapor from damaging workpiece
O	Air Adjusting Valve (optional)	For fine tuning airflow at Tool

Read the ENTIRE IMPORTANT SAFETY INFORMATION section at the beginning of this manual including all text under subheadings therein before set up or use of this product.

Inspect Tool before use, looking for damaged, loose, and missing parts. If any problems are found, do not use Tool until repaired.

Workpiece and Work Area Set Up

1. Designate a work area that is clean and well-lit. The work area must not allow access by children or pets to prevent distraction and injury.
2. Route the air hose along a safe route to reach the work area without creating a tripping hazard or exposing the air hose to possible damage. The air hose must be long enough to reach the work area with enough extra length to allow free movement while working.
3. Secure loose workpieces using a vise or clamps (not included) to prevent movement while working.
4. There must not be hazardous objects (such as utility lines or foreign objects) nearby that will present a hazard while working.

Loading the Tool

⚠WARNING

TO PREVENT SERIOUS INJURY FROM ACCIDENTAL DISCHARGE, BEFORE LOADING:

- **Wear ANSI-approved safety goggles with side shields.** Other people in the work area must also wear ANSI-approved impact safety goggles with side shields.
- **Detach the air supply.**
- **Attempt to discharge the Tool into a piece of scrap wood to ensure that it is disconnected and is incapable of driving any fasteners.**

Note: PREVENT JAMS! Empty magazine before loading nails/staples of different length. Press the Latch and pull the Movable Magazine back to rear of Fixed Magazine to allow old nail/staple strip to be removed.

Loading Cleat Nails:

1. Press the Latch and pull the Movable Magazine back.
2. Place a full clip of the desired size cleat nails (1-1/2" to 2" long) in the Fixed Magazine **from the side**. The head of the cleat nails should be inserted into the notch on the Fixed Magazine. Up to 100 cleat nails may be loaded in the Fixed Magazine.
3. Push the Movable Magazine forward and secure in place with the Latch.

Loading Staples:

1. Press the Latch and pull the Movable Magazine back.
2. Place a full clip of the desired size staples (1" to 2" long) in the Fixed Magazine **from the top**. Up to 80 staples may be loaded in the Fixed Magazine.
3. Push the Movable Magazine forward and secure in place with the Latch.

Changing the Spacer

The Tool is equipped with a factory *pre-installed* Spacer for 3/4" Boards and an additional *uninstalled* Spacer for 1/2" Boards. To change the Spacer:

1. Disconnect the Tool from its air supply.
2. Empty the Magazine completely.
3. Attempt to discharge the Tool into a piece of scrap wood to ensure that it is disconnected and is incapable of driving any fasteners.
4. Set the Tool on its side to expose the three Screws.

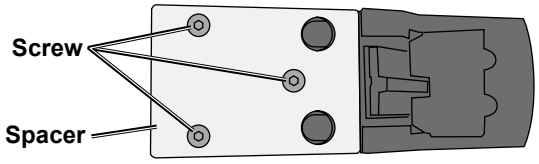

5. Remove the three Screws. Then remove the current Spacer.
6. Align the three mounting holes in the desired Spacer with the three threaded mounting holes.
7. Secure the Spacer to the Tool, using the three Screws.

⚠WARNING

This Tool DOES NOT use a Workpiece Contact.
Caution must be used whenever this Tool is connected to an air supply.
If the Tool is dropped, or if the Head Cap is accidentally struck, then the Tool will discharge a fastener, potentially causing **SEVERE PERSONAL INJURY.**

1. If an automatic oiler is not used, add a few drops of Pneumatic Tool Oil to the airline connection before use. Add a few drops more after each hour of continual use.

WARNING! TO PREVENT SERIOUS INJURY:
Keep your feet away from Tool discharge area.
Tool applies extreme force to fastener, and fasteners may deflect or discharge in an unexpected direction.

2. Hold the Arm securely and press the Spacer against the work surface, making sure the Spacer is in position.
3. Press down hard so that the Spacer is firmly contacting the work surface.
4. Using the Hammer, strike the Head Cap firmly to drive the fastener into the work surface.
5. Position the Tool for the next fastener and repeat the process until the job is completed.

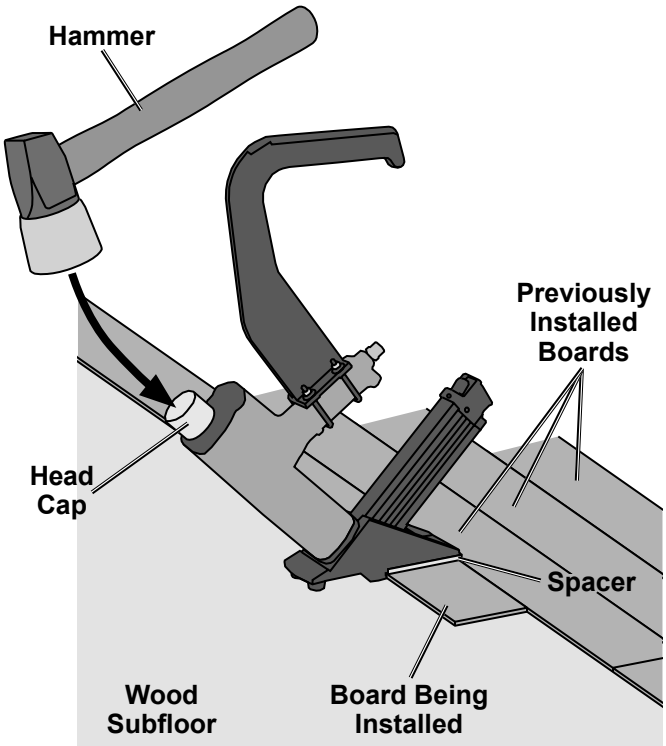

6. If the Tool requires more force to accomplish the task, verify that the Tool receives sufficient, unobstructed airflow (CFM) and increase the pressure (PSI) output of the regulator up to the maximum air pressure rating of this Tool.

   CAUTION! TO PREVENT INJURY FROM TOOL FAILURE:
   Do not exceed the Tool's maximum air pressure rating.
   If the Tool still does not have sufficient force at maximum pressure and sufficient airflow, then a larger Tool may be required.

7. **After use, to prevent accidents:**
   a. **Detach the air supply.**
   b. **Empty the Magazine.**
   c. **Attempt to discharge the Tool into a piece of scrap wood to ensure that it is disconnected and is incapable of driving any fasteners.**
   d. **Clean and oil the Blade Guide and Magazine. Clean external surfaces with clean, dry cloth.**
   e. **Store indoors out of children's reach.**

User-Maintenance Instructions

Procedures not specifically explained in this manual must be performed only by a qualified technician.

WARNING

TO PREVENT SERIOUS INJURY FROM ACCIDENTAL DISCHARGE,
BEFORE ANY MAINTENANCE OR REPAIRS ARE DONE (including clearing jams):

- **Wear ANSI-approved safety goggles with side shields.**
  Other people in the work area must also wear ANSI-approved impact safety goggles with side shields.
- **Detach the air supply.**
- **Attempt to discharge the Tool into a piece of scrap wood to ensure that it is disconnected and is incapable of driving any fasteners.**
- **Empty the Magazine and leave it open during service.**
  The Magazine is spring-loaded and may cause parts or a fastener to fly out of the Tool.

TO PREVENT SERIOUS INJURY FROM TOOL FAILURE:
Do not use damaged equipment.
If abnormal noise, vibration, or leaking air is detected, have the problem corrected before further use.

TO PREVENT EXPLOSION: Lubricate only with specified lubricants. Lubricate the air inlet using only pneumatic tool oil. Lubricate the internal mechanism using only white lithium grease. Other lubricants may damage the mechanism and may be highly flammable, causing an explosion.

Note: These procedures are in addition to the regular checks and maintenance explained as part of the regular operation of the air-operated Tool.

1. **BEFORE EACH USE,** inspect the general condition of the Tool. Check for:
   - loose hardware or housing
   - misalignment or binding of moving parts
   - cracked or broken parts
   - any other condition that may affect its safe operation.

2. **AFTER EACH USE,** perform the following procedures:
   - detach the air supply and empty the Magazine
   - attempt to discharge the Tool into a piece of scrap wood to ensure that it is disconnected and is incapable of driving any fasteners
   - clean the Blade Guide and Magazine to remove any accumulated dirt and debris. Lightly oil the Blade Guide and Magazine
   - clean external surfaces with clean, dry cloth
   - store indoors out of children′s reach.

3. **Daily - Air Supply Maintenance:**
   Every day, perform maintenance on the air supply according to the component manufacturers' instructions. Maintain the lubricator's oil level. Drain the moisture filter regularly.
   Performing routine maintenance on the air supply will allow the Tool to operate more safely and will also reduce wear on the Tool.

Clearing Jams

⚠WARNING

TO PREVENT SERIOUS INJURY FROM ACCIDENTAL DISCHARGE,
BEFORE ANY MAINTENANCE OR REPAIRS ARE DONE (including clearing jams):

- **Wear ANSI-approved safety goggles with side shields.**
  Other people in the work area must also wear ANSI-approved impact safety goggles with side shields.
- **Detach the air supply.**
- **Attempt to discharge the Tool into a piece of scrap wood to ensure that it is disconnected and is incapable of driving any fasteners.**
- **Empty the Magazine and leave it open during service.**
  The Magazine is spring-loaded and may cause parts or a fastener to fly out of the Tool.

1. To remove a jammed cleat nail/staple, disconnect the Tool from its air supply, lift the Latch and slide the Moveable Magazine back until it locks in place. Then lean the Floor Nailer back.
2. Remove all cleat nails/staples from the Moveable Magazine. Then press the Latch and slide the Moveable Magazine forward all the way, making sure it locks in place.
3. Attempt to discharge the Floor Nailer into a piece of scrap wood to ensure it is disconnected and is incapable of driving any nails/staples.
4. With the Blade Guide facing away from you, remove the four Screws holding the Guide in place. Remove the Blade Guide to expose the jammed cleat nail/staple.
5. Pull out the jammed fastener and the remainder of the fastener strip that is still in the Magazine. Dispose of the remaining fastener strip; it may be bent or damaged in some other way.
6. Replace the Blade Guide and four Screws.
7. Reload the Tool with cleat nails/staples. Then, reconnect the air supply hose to the Tool.
8. Press the Blade Guide against a piece of scrap wood, and test actuate the Floor Nailer several times while checking for proper operation. If the Tool is properly driving, you may continue using the Tool. If the Tool fails to perform properly, immediately discontinue use and have the Tool repaired by a qualified service technician.
9. If you are unable to clear the fastener jam using the method prescribed above, the Tool should be taken to a qualified service technician for proper servicing.

Troubleshooting

Problem	Possible Causes	Likely Solutions
Insufficient fastener depth.	1. Incorrect tool depth setting. 2. Not enough air pressure. 3. Incorrect lubrication or not enough lubrication. 4. Blocked air inlet screen (if equipped). 5. Mechanism contaminated.	1. Adjust depth setting, if available. 2. Check for loose connections and make sure that air supply is providing enough air pressure (PSI) to the Tool's air inlet. **Do not exceed maximum air pressure.** 3. Lubricate using air Tool oil and grease according to directions. 4. Clean air inlet screen of buildup. 5. Have qualified technician clean and lubricate mechanism. Install in-line filter in air supply as stated in Initial Set Up: Air Supply.
Fasteners drive too deeply.	1. Incorrect Tool depth setting. 2. Too much air pressure.	1. Adjust depth setting, if available. 2. Reduce air supply pressure (PSI).
Tool cycles without driving fastener.	1. Jammed fastener. 2. Tool empty. 3. Incorrect fasteners used. 4. Magazine dirty or not lubricated properly. 5. Insufficient air flow.	1. Clear jammed fastener according to Clearing Jams instructions. 2. Reload with correct fasteners. 3. Empty, then reload with correct fasteners. 4. Clean and lubricate Magazine and Pusher. 5. Check for loose connections and make sure that air supply is providing enough air flow (CFM) and pressure (PSI) to the Tool's air inlet. **Do not exceed maximum air pressure.**
Frequent jamming.	Incorrect nail /staple type.	Confirm nail /staple type, gauge, crown, and length. Correct as needed.
Severe air leakage. (Slight air leakage is normal, especially on older tools.)	1. Cross-threaded housing components. 2. Loose housing. 3. Damaged valve or housing. 4. Dirty, worn or damaged valve.	1. Check for incorrect alignment and uneven gaps. If cross-threaded, disassemble and replace damaged parts before use. 2. Tighten housing assembly. If housing cannot tighten properly, internal parts may be misaligned. 3. Replace damaged components. 4. Clean or replace valve assembly.

Follow all safety precautions whenever diagnosing or servicing the Tool.
Disconnect air supply before service.

PLEASE READ THE FOLLOWING CAREFULLY

THE MANUFACTURER AND/OR DISTRIBUTOR HAS PROVIDED THE PARTS LIST AND ASSEMBLY DIAGRAM IN THIS MANUAL AS A REFERENCE TOOL ONLY. NEITHER THE MANUFACTURER OR DISTRIBUTOR MAKES ANY REPRESENTATION OR WARRANTY OF ANY KIND TO THE BUYER THAT HE OR SHE IS QUALIFIED TO MAKE ANY REPAIRS TO THE PRODUCT, OR THAT HE OR SHE IS QUALIFIED TO REPLACE ANY PARTS OF THE PRODUCT. IN FACT, THE MANUFACTURER AND/OR DISTRIBUTOR EXPRESSLY STATES THAT ALL REPAIRS AND PARTS REPLACEMENTS SHOULD BE UNDERTAKEN BY CERTIFIED AND LICENSED TECHNICIANS, AND NOT BY THE BUYER. THE BUYER ASSUMES ALL RISK AND LIABILITY ARISING OUT OF HIS OR HER REPAIRS TO THE ORIGINAL PRODUCT OR REPLACEMENT PARTS THERETO, OR ARISING OUT OF HIS OR HER INSTALLATION OF REPLACEMENT PARTS THERETO.

Record Product's Date Code Here:_____

Note: If product has no Date Code, record month and year of purchase instead.

Note: Some parts are listed and shown for illustration purposes only, and are not available individually as replacement parts. Specify UPC 193175574107 when ordering parts.

Parts List

Part	Description	Qty
1	Cylinder Bushing	1
2	O-Ring 19.2x1.8	1
3	Plunger	1
4	O-Ring 15.9x1.8	1
5	Poppet	1
6	O-Ring 17.5x2.6	1
7	Piston Assembly	1
8	Pin 6x20	1
9	Driver Blade	1
10	Piston	1
11	O-Ring 57.4x3.5	1
12	Bumper	1
13	Hammer Face	1
14	Screw M5x16	7
15	Cylinder Cap	1
16	Screw M4x16	6
17	Spring Washer 4	7
18	Poppet Actuator	1
19	O-Ring 54.2x3.5	1
20	Seal	1
21	Body	1
22	Gasket	1
23	Handle	1
24	Nut M6	2
25	S5 Extension Wrench	1
26	S4 Wrench	1
27	S3 Wrench	1
28	Grip Plate	1
29	Arm	1
30	Screw M6x25	8
31	Handle Sleeve	1
33	Washer M6	10
34	Arm Sleeve	1
35	Hammer	1
36	Baffle Plate	1
37	Screw 5x16	4
38	Washer M5	4
39	Shoe	1

Part	Description	Qty
40	Bushing	2
41	Foot Pad	2
42	Screw M6x16	2
43	Screw M6x35	4
44	Roll Pin 3x14	3
45	Blade Guide	1
46	Limited Nail Plate	1
47	Bolt M4x16	1
48	Nose	1
49	Feeder Shoe	1
50	Pin 2.5x11	2
51	Feeder Shoe Spring	2
52	Movable magazine	1
53	Screw M3x6	4
54	The Guide Plate	1
55	Magnet	3
56	Screw M3x5	2
57	Washer M3	2
58	Leaf Spring	1
59	Latch	1
60	Nut M4	1
61	Limited Plate	1
62	Small Bushing	1
63	Hook Spring	1
64	Screw M4x20	1
65	Screw M3x8	2
66	Nut M4	1
67	Hook	1
68	Pin 3x12	1
69	Magazine Plate	1
70	Stepped Screw	1
71	Fixed Magazine	1
72	Baffle Lock	1
73	Screw M6x12	3
74	Spacer 3/4"	1
75	Spacer 1/2"	1
76	Washer 5	1
77	O-Ring 42.5X5.4	1

BANKS®

Assembly Diagram

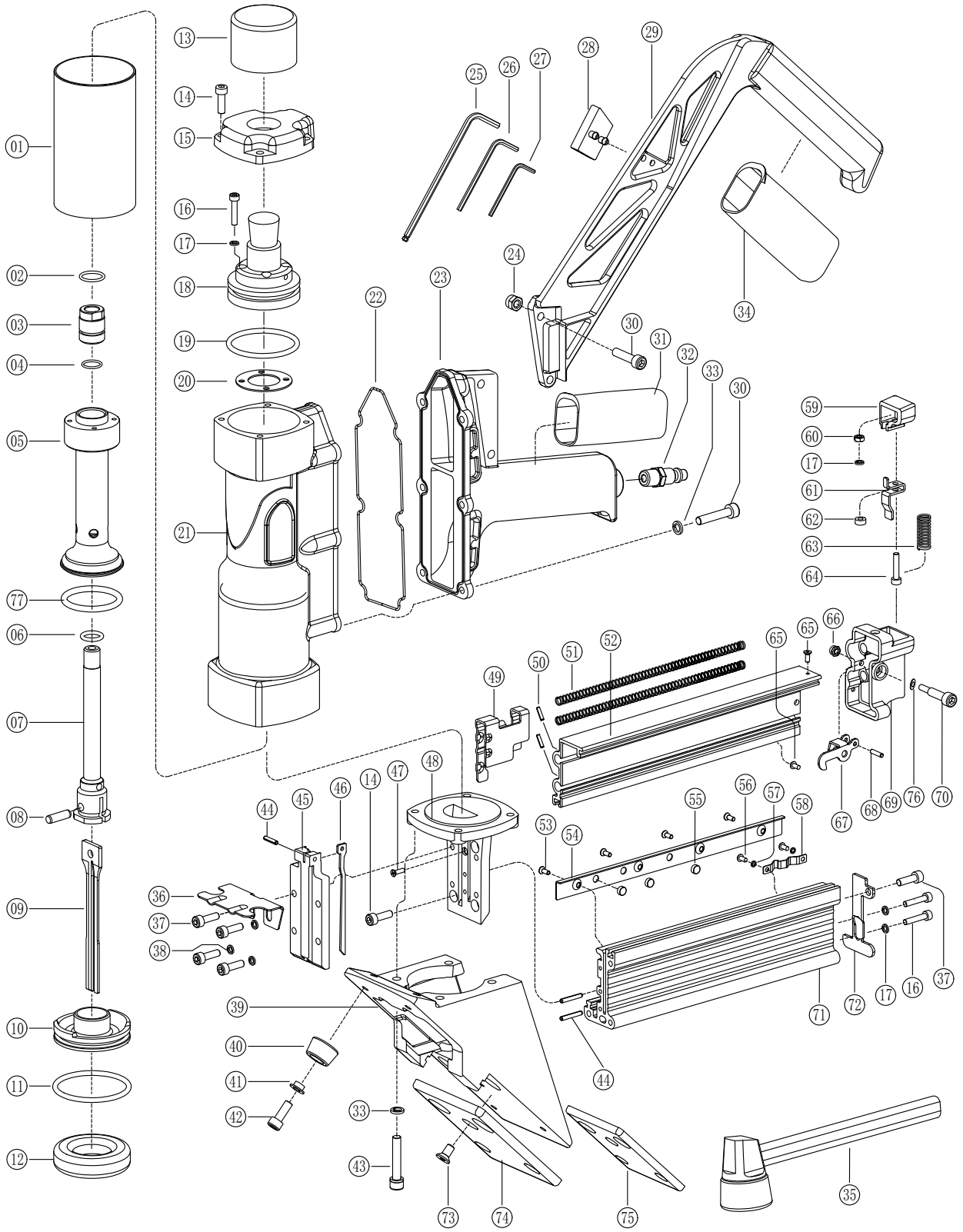

SAFETY

SETUP

OPERATION

MAINTENANCE

Limited 90 Day Warranty

Harbor Freight Tools Co. makes every effort to assure that its products meet high quality and durability standards, and warrants to the original purchaser that this product is free from defects in materials and workmanship for the period of 90 days from the date of purchase. This warranty does not apply to damage due directly or indirectly, to misuse, abuse, negligence or accidents, repairs or alterations outside our facilities, criminal activity, improper installation, normal wear and tear, or to lack of maintenance. We shall in no event be liable for death, injuries to persons or property, or for incidental, contingent, special or consequential damages arising from the use of our product. Some states do not allow the exclusion or limitation of incidental or consequential damages, so the above limitation of exclusion may not apply to you. THIS WARRANTY IS EXPRESSLY IN LIEU OF ALL OTHER WARRANTIES, EXPRESS OR IMPLIED, INCLUDING THE WARRANTIES OF MERCHANTABILITY AND FITNESS.

To take advantage of this warranty, the product or part must be returned to us with transportation charges prepaid. Proof of purchase date and an explanation of the complaint must accompany the merchandise. If our inspection verifies the defect, we will either repair or replace the product at our election or we may elect to refund the purchase price if we cannot readily and quickly provide you with a replacement. We will return repaired products at our expense, but if we determine there is no defect, or that the defect resulted from causes not within the scope of our warranty, then you must bear the cost of returning the product.

This warranty gives you specific legal rights and you may also have other rights which vary from state to state.

BANKS®

26677 Agoura Road • Calabasas, CA 91302 • 1-800-444-3353